Smart Radiator Thermostat

Featuring LoRaWAN®

WT103

WT103 is a LoRaWAN® radiator thermostat designed to help manage the heating control system. With one preset date period and up to 16 customized heating plans, it enables the smart management of the heating system. WT103 is a smart and highly environmentally-sensitive product. Abnormal temperature difference and extremely low temperatures can quickly trigger it, prompting fast corrective action by adjusting the valve opening.

Compliant with Milesight LoRaWAN® gateway and Milesight Development Platform solution, users can control the room temperature as well as triggering other sensors or appliances easily remotely.

WT103 is widely used for smart heating control in buildings, homes, and water-based underfloor heating systems.

◆ Features

- Built-in temperature sensor with support for WT401 wireless thermostat connection enables environmental detection and accurate control
- Adjust the room temperature automatically and manually with a time-controlled regulation
- Up to 16 heating plans within 1 pre-set Date Period
- Intuitive, direction-adjustable LCD display suitable for various installation environments
- Support open-window detection and freeze protection
- Equip with child-lock to enable tamper-proof in public area
- Theft-deterring collar accessory for structural anti-theft protection
- Easy to install with simple lock design without further setting
- Equipped with NFC for one touch configuration

- Function well with standard LoRaWAN® gateways and network servers
- Compatible with Milesight Development Platform
- Support Firmware Update Over the Air (FUOTA) feature

Specifications

Wireless Transmission	
Protocol	LoRaWAN®
Frequency	EU868
Tx Power	14dBm
Sensitivity	-137dBm @125kHz, SF12
Mode	OTAA/ABP, Class A
Valve Control	
Actuator	Stepping Motor
Default Valve Fitting	M30 ×1.5 mm
Supported Adapters (Plastic or Metal)	RA, RAV, RAVL, Giacomini, M28 (Comap, Herz, TA, Markaryd) (Customizable)
Advanced Feature	0-5 Scale, Automatic Temperature Control, Valve Opening Control, Heating Plans, Freeze Protection, Open-Window Detection, Effective Stroke, Valve Descaling
Temperature Sensor	
Sensor Type	NTC
Range	-20°C ~ 60°C
Accuracy	± 0.5°C (0°C ~ 50°C)
Resolution	0.1°C
Others	
Display	LCD Display with backlight
Buttons	1 × Power/Reset Button, 2 × Scale Level/Temperature/Valve Opening Control Buttons
Software	
Configuration	NFC via Mobile App or Downlink
Advanced Feature	Child Lock, FUOTA
Physical Characteristics	
Power Supply	2 x 1.5V Li-FeS2 AA Replaceable Batteries (3000 mAh in Total)
Battery Life[1]	Around 5 Years (SF10, EU868) (10 min Interval + During 5-month Heating Season, 25°C)

Operating Temperature	-20°C ~ 60°C
Relative Humidity	0% - 95% (Non-condensing)
Ingress Protection	IP30
Dimension	48 × 54.3 × 96.7 mm
Weight	200g (With Batteries)
Material & Color	ABS + PC +Aluminum, White/Black
Installation	Latching on the Valve
Approvals	
Regulatory	CE
Environmental	RoHS

[1]Tested under laboratory conditions and for guideline purposes only.
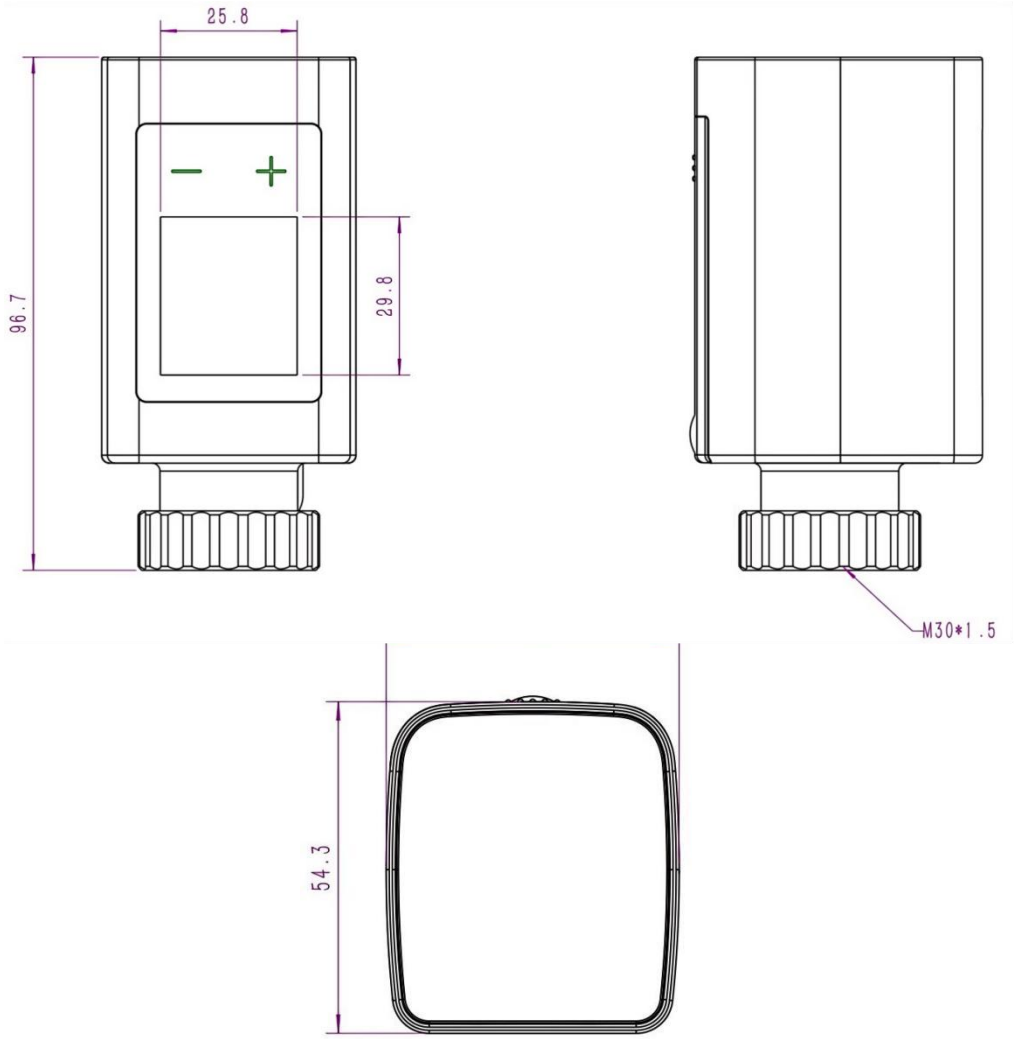
◆ Dimensions (mm)